Portable distributor - rubber - Distributor - solid rubber - portable

Product description	
BALS-Prd.-Nr	522589
EAN	4024941107068
Product category	Distributor, solid rubber, portable
Protection degree	IP54
Colour of appliance	Housing bottom simular black RAL 9017, Housing top simular yellow RAL 1021
Height	250mm
Width	210mm
Depth	210mm

Bals-Polska Elektrotechnika Sp. Z o.o. ul. ubniaska 4a, 46-024 Brynica PL
phone: +48 77 4016 210 / fax: +48 77 4016 215 / email: kontakt@bals.pl

Logistics data	
Weight/pcs	6.392 kg / Piece
Packaging	Carton
Content amount	1 ST
EAN	4024941107068
Length	370 mm
Width	360 mm
Height	325 mm
Weight	6.853 kg
Volume	39,060 ccm

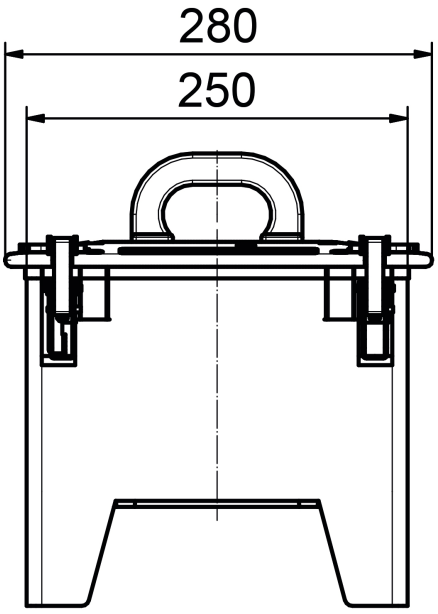

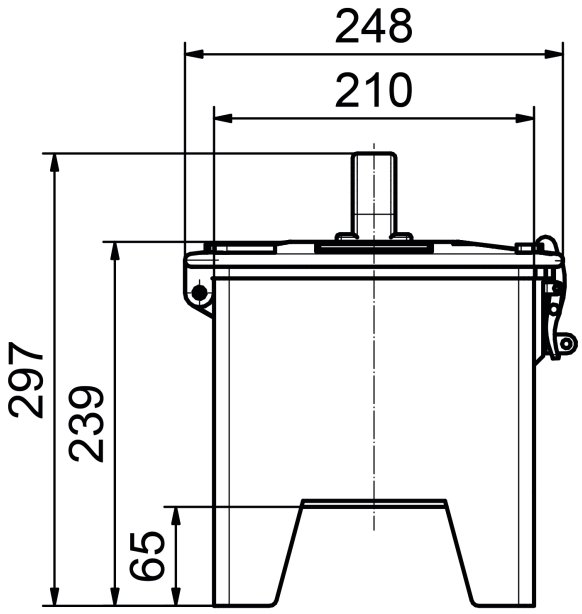

Bals-Polska Elektrotechnika Sp. Z o.o. ul. ubniaska 4a, 46-024 Brynica PL
phone: +48 77 4016 210 / fax: +48 77 4016 215 / email: kontakt@bals.pl

Bals-Polska Elektrotechnika Sp. Z o.o. ul. ubniaska 4a, 46-024 Brynica PL
phone: +48 77 4016 210 / fax: +48 77 4016 215 / email: kontakt@bals.pl