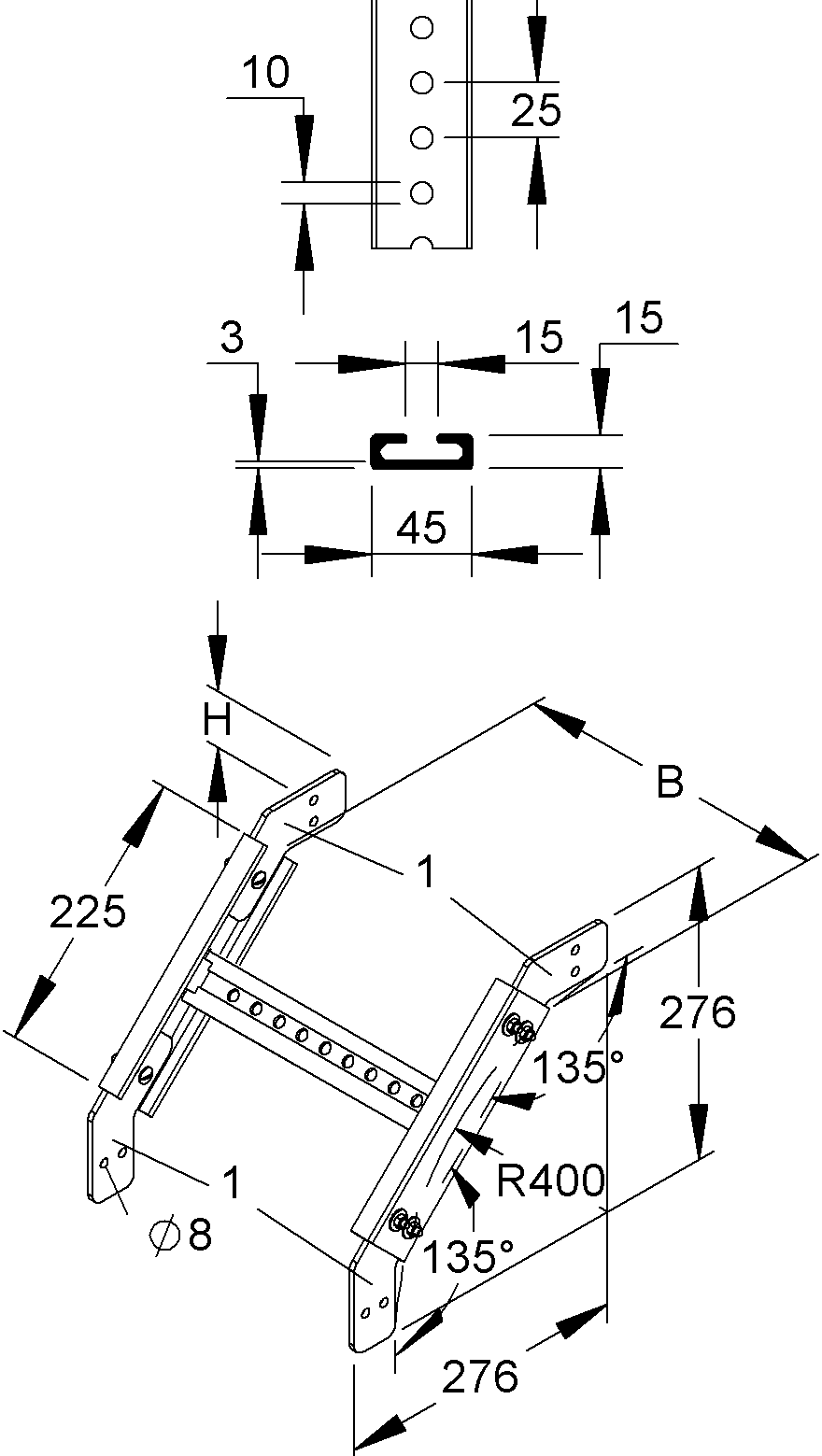
10
25
3
15
15
45
H
B
1
225
276
135°
R400
1
∅8
135°
276