THIS COPY IS PROVIDED ON A RESTRICTED BASIS AND IS NOT TO BE USED IN ANY WAY DETRIMENTAL TO THE INTERESTS OF PANDUIT CORP.

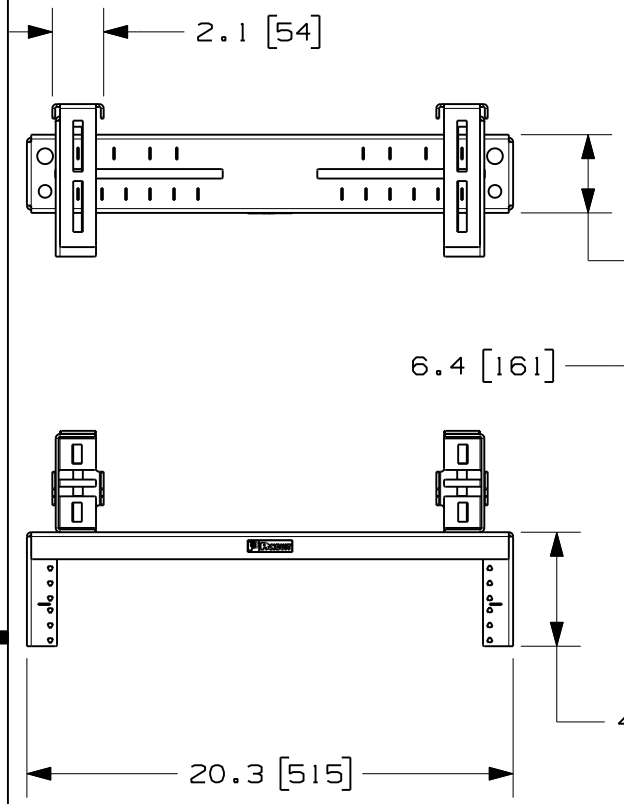

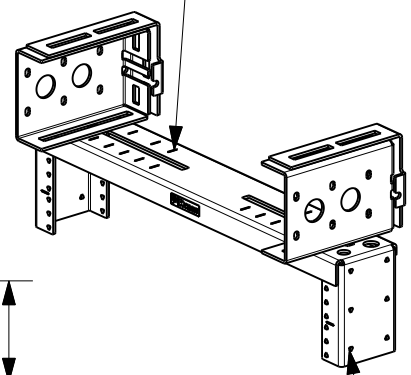

MARKINGS CORRESPOND TO THE VARIOUS LOCATIONS/ORIENTATIONS BRACKETS CAN BE MOUNTED.

HOLES FOR ATTACHING CABLE MANAGEMENT PRODUCTS. (SEE NOTE 5)

PANDUIT PART NO.	WEIGHT
PZLRB2U	10.42 LBS/EACH 4.73 kgs/EACH

NOTES:
1. SEE CURRENT CATALOG FOR ADDITIONAL PART NUMBER SUFFIXES TO INDICATE COLOR AND OR PACKAGE QUANTITY.
2. SEE CATALOG FOR COMPLETE LIST OF PARTS APPLICABLE FOR USE WITH THIS PART.
3. DIMENSIONS IN PARENTHESES ARE IN METRIC.
4. PART INCLUDES:
   - 1- MAIN BRACKET
   - 2- RECTANGULAR BRACKETS
   - 2- L-SHAPED ATTACHMENT BRACKETS
   - 6- 3-8/16 HEX SERRATED FLANGE NUTS
   - 6- 3-8/16 CARRIAGE BOLTS
   - 2- #12-24 SCREWS (4 PACK)
5. CABLE MANAGEMENT OPTIONS:
   - BEND RADIUS POSTS (PZBR4)
   - VERTICAL D-RINGS (CMVDR2)

REV	DATE	BY	CHK	DESCRIPTION	ECN - R	CUST	SUP	OTH
00A	6-6-11	PM	SRK	RELEASED TO PRODUCTION	V10521A0-DC			

MODEL FILENAME: V10521A0/00

CAD FILENAME/LAYERS: V10521A0_DC/00A

PANDUIT CORP. TINLEY PARK, ILLINOIS

PANZONE OVERHEAD DISTRIBUTION RACK (PZLRB2U) CUSTOMER DRAWING

UNLESS OTHERWISE SPECIFIED, DIMENSIONAL TOLERANCES ARE:

INCHES		[METRIC - MILLIMETER]		ANGLE
X.X	+/- 0.03	X.	+/- 0.8	+/- 1°
X.XX	+/- 0.015	X.X	+/- 0.4	
X.XXX	+/- 0.005	X.XX	+/- 0.13	

UNLESS OTHERWISE SPECIFIED, ALL DIMENSIONS ARE GIVEN IN INCHES, THIRD ANGLE PROJECTION.

DRAWN BY: PM

DATE: 6-6-11

CHK'D: SRK

MAT'L: N/A

SCALE: 1:8

DRAWING NO.: V10521A0-DC

DWG SIZE: A