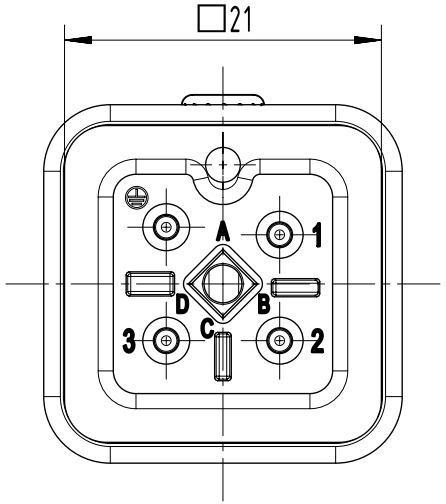

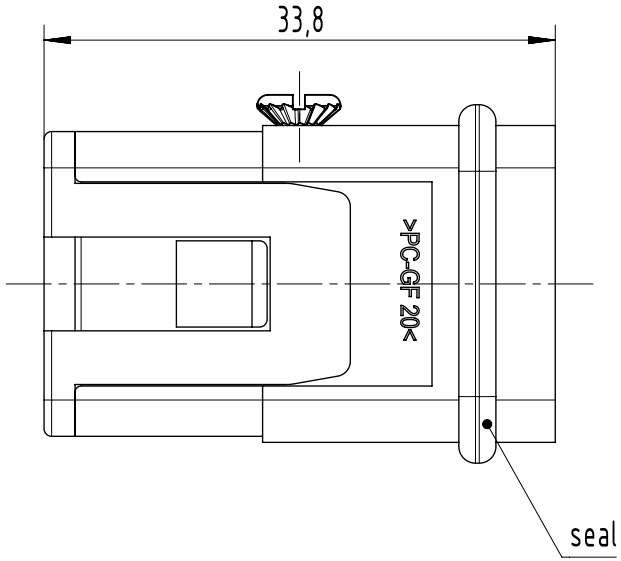

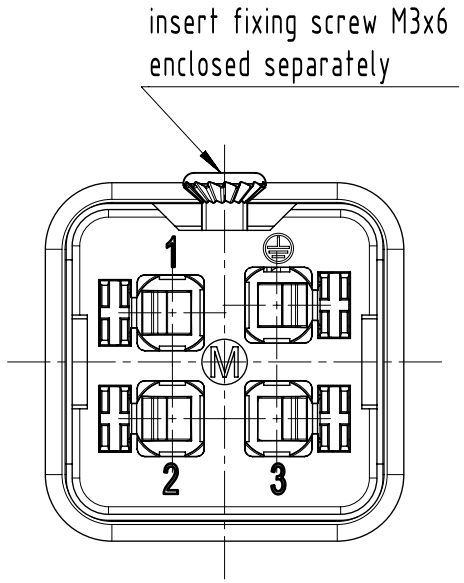

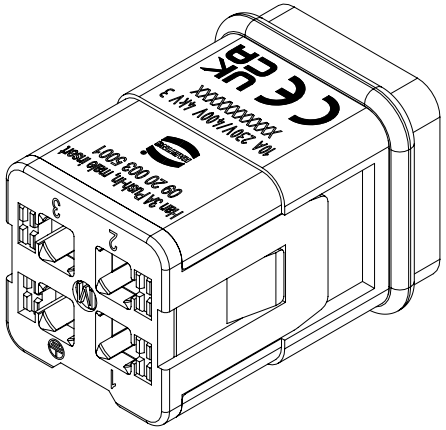

All Dimensions in mm Original Size DIN A4	Scale 2:1	Free size tol.		Ref. Sub.	
All rights reserved Department EL PD	Created by longl	Inspected by wangst	Standardisation	Date 08-Nov-2024	State 40 - Released
	Title Han 3A Push-In, male insert				Doc-Key / ECM-Nr. DS00210886
HARTING D-32339 Espelkamp	Type TB	Design Number DS00210886	SAP Mat. Number 09200035001	Rev. E	Page 1/1

A4