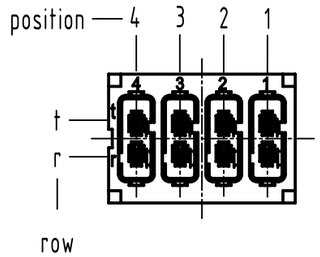

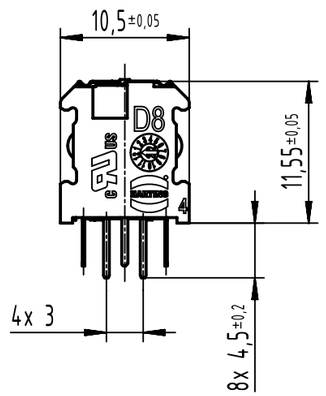

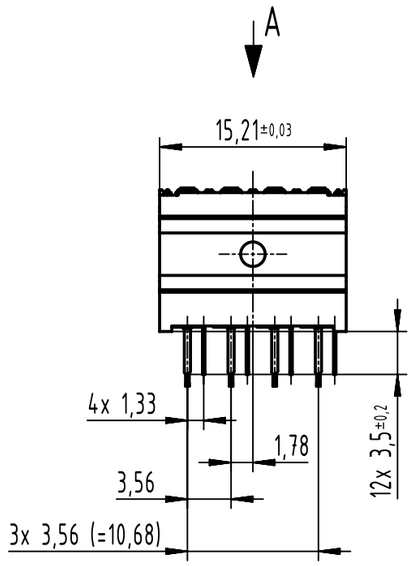

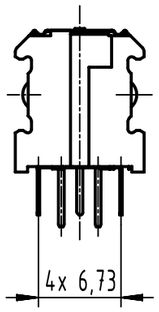

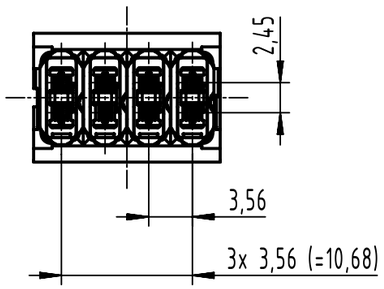

A (5:1)
board drillings

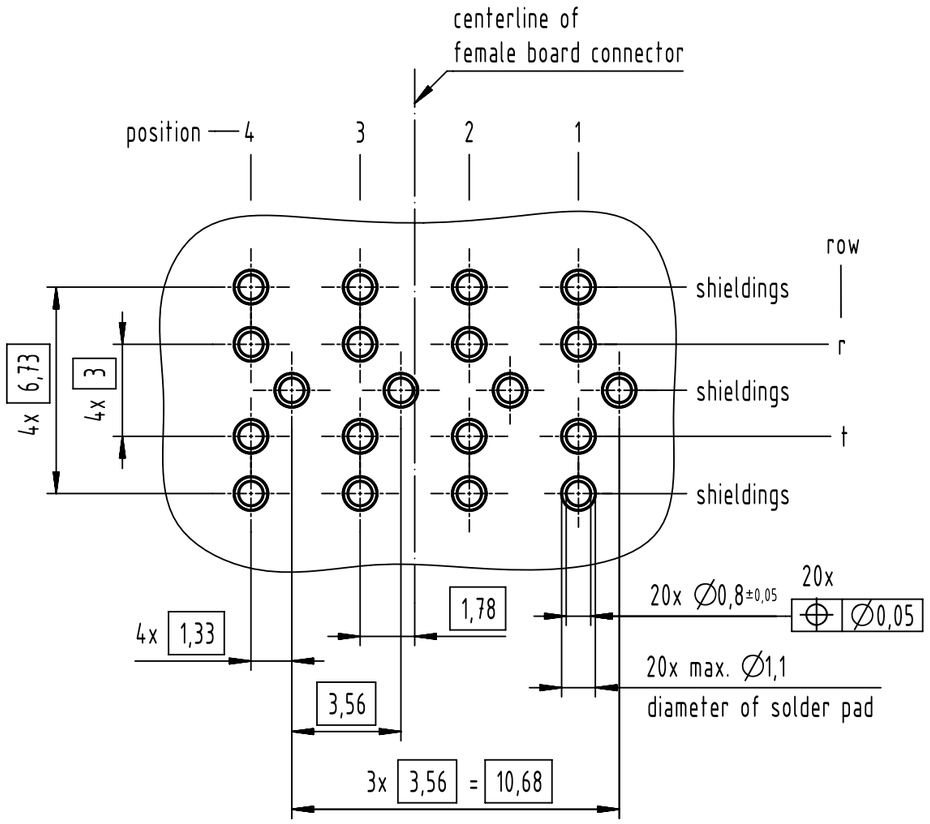

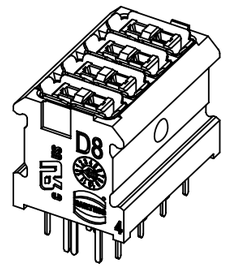

All Dimensions in mm Original Size DIN A3	Scale 2:1	Free size tol.		Ref. Sub.	
All rights reserved Department EL PD	Created by HASELOH	Inspected by LUECKEMEIERM	Standardisation	Date 2023-01-31	State Final Release
HARTING D-32339 Espelkamp	Title har-modular D8 data module female straight 4,5mm				Doc-Key / ECM-Nr. 100941464/UGD/003/C 500000236123
	Type TB	Number 02529081502		Rev. C	Page 1/1

A3